A1 SIZE – 594mm x 841mm

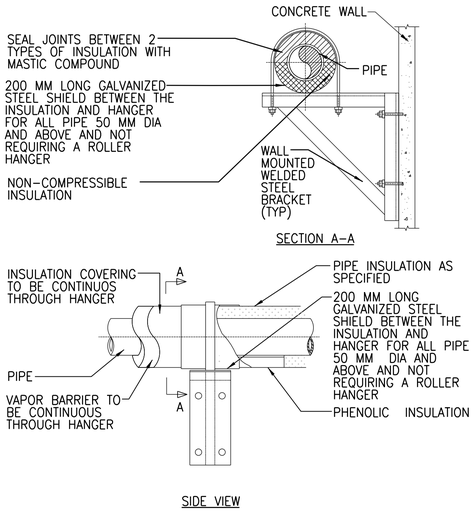

TYPICAL PIPE INSULATION DETAIL (BRACKET)
NTS

2205-701

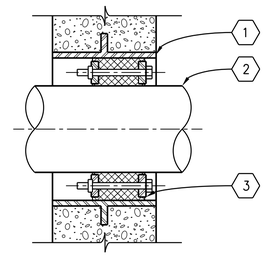

1. PIPE SLEEVE
2. PASSING PIPE
3. MODULAR MECHANICAL SEAL ASSEMBLY WITH SST BOLTS AND NUTS, AS SPECIFIED

WALL PIPE PENETRATION SEAL
NTS

2210-103

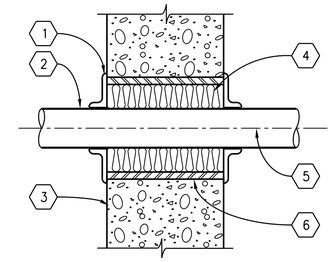

1. ESCUTCHEONS, TYPICAL
2. SERVICE PIPE
3. CMU WALL
4. PACKED MINERAL FIREPROOFING & SAFING
5. CENTER PIPE THRU SLEEVE
6. STEEL PIPE SLEEVE, 50MM LARGER THAN SERVICE PIPE, EXAMPLE: 25MM PIPE REQUIRES 75MM SLEEVE SIZES NOMINAL.

INTERIOR PIPE SLEEVE
NTS

2210-104

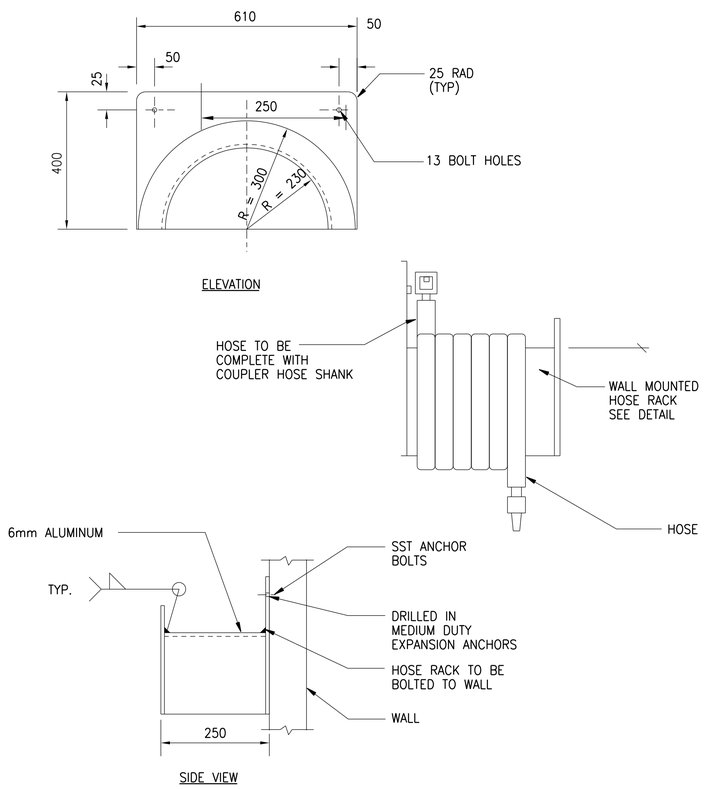

HOSE RACK-WALL MOUNT
NTS

2210-720

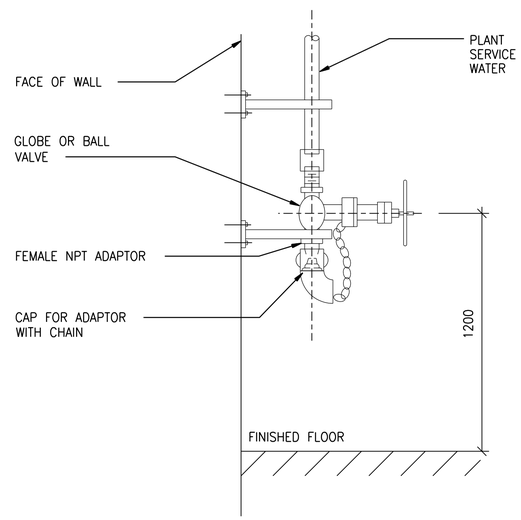

NOTE:

1. REFER TO CONTRACT DRAWINGS FOR VALVE AND PIPING SIZES
2. PROVIDE HOSE RACK HOSE DOWN STATION (2210-720) FOR EACH

INTERIOR HOSE VALVE
NTS

2210-300

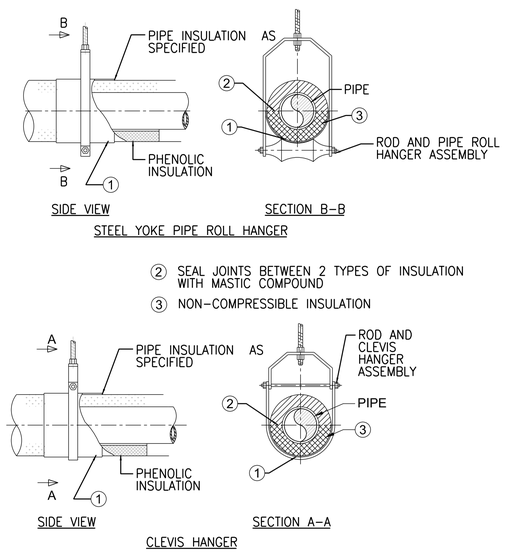

DETAIL NOTES

1. 200 mm LONG GALVANIZED STEEL SHIELD BETWEEN THE INSULATION AND HANGER FOR ALL PIPE 50 MM DIA AND ABOVE AND NOT REQUIRING A ROLLER HANGER

TYPICAL PIPE HANGER
NTS

2210-450

APEGM
Certificate of Authorization
CH2M HILL Canada Ltd.
No. 1441

NO.	REVISIONS	DATE	DESIGN	CHECK
02	ISSUED FOR CONSTRUCTION – 976-2016	2017/04/05	K.F.	J.C.
01	ISSUED FOR CONSTR – B.O. 899-2015	04/2016	K.F.	J.C.
00	ISSUED FOR TENDER – B.O. 899-2015	01/2016	K.F.	J.C.

CH2MHILL. SNC·LAVALIN KGS GROUP

DESIGNED BY: T. TRAN	CHECKED BY: D. CUDDINGTON
DRAWN BY: K. FONG	APPROVED BY: H.T. FREIHAMMER
SCALE: NTS	ISSUED FOR CONSTRUCTION BY: J. SHUMKA
DATE: 2017/04/05	DATE: 2017/04/05
CONSULTANT NO.: 474248	

ENGINEER'S SEAL
PROVINCE OF MANITOBA
T.T. TRAN
Member 40578
UNREGISTERED PROFESSIONAL ENGINEER
Apr. 5/17.

Winnipeg
THE CITY OF WINNIPEG
WATER AND WASTE DEPARTMENT

SOUTH END WATER POLLUTION CONTROL CENTRE
SEWPCC UPGRADING/EXPANSION PROJECT
MECHANICAL
PLUMBING
STANDARD DETAILS (1)

CITY DRAWING NUMBER	SHEET	REV.	SIZE
1-0102-MDTL-A002		02	A1

PLOT DATE: 2017\03\31
FILE NAME: 1-0102-MDTL-A002.dgn

©CH2M HILL 2017. ALL RIGHTS RESERVED.