A1 SIZE – 594mm x 841mm

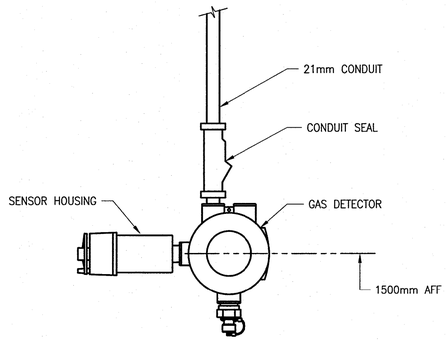

A WALL MOUNTED HYDROCARBON DETECTOR
NTS

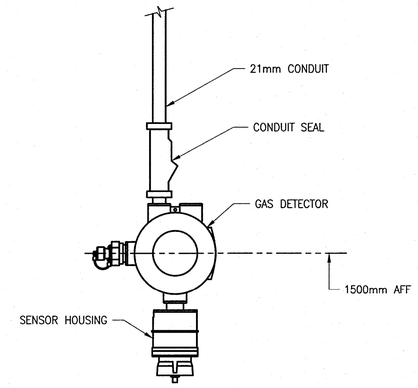

B WALL MOUNTED H_2S DETECTOR
NTS

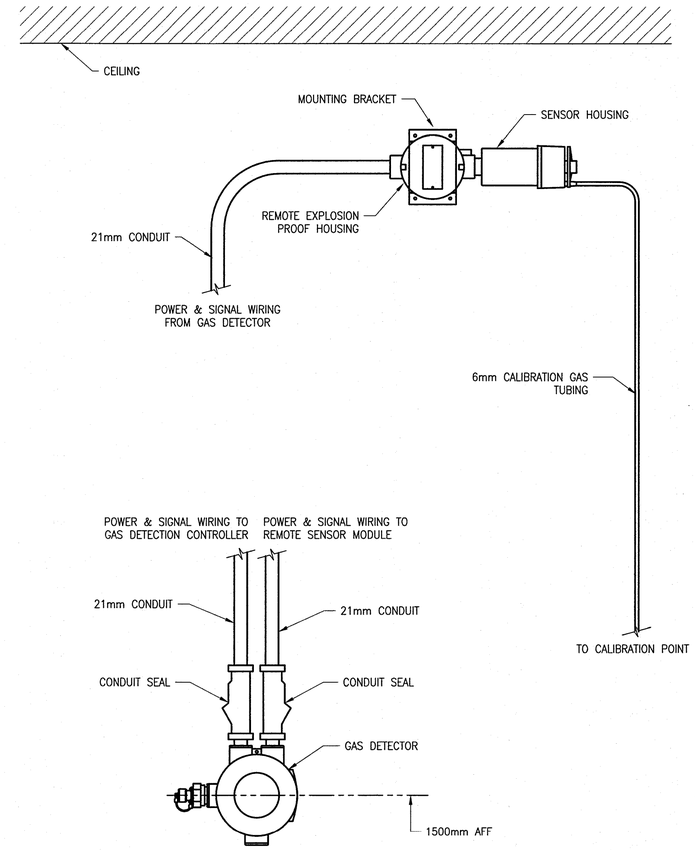

C WALL MOUNTED METHANE REMOTE SENSOR DETECTOR
NTS

REFERENCE DRAWINGS	DESCRIPTION

NOTES
1.

APEGM
Certificate of Authorization
SNC-Lavalin Inc.
No. 4489

NO.	REVISIONS	DATE	DESIGN	CHECK
00	ISSUED FOR CONSTRUCTION – 976-2016	2017/04/05	SSB	TMC

CH2MHILL.
SNC·LAVALIN
KGS GROUP CONSULTING ENGINEERS

DESIGNED BY: S. BOGHOSIAN	CHECKED BY: T. CHURCH
DRAWN BY: MJ. PERSSON	APPROVED BY: E. RYCZKOWSKI
SCALE: NTS	ISSUED FOR CONSTRUCTION BY: J. SHUMKA
DATE: 2015/10/09	DATE: 2017/04/05
CONSULTANT NO.: 474248	

ENGINEER'S SEAL
PROVINCE OF MANITOBA
T.M. CHURCH
Member
32682
REGISTERED PROFESSIONAL ENGINEER
Apr. 5, 2017

Winnipeg
THE CITY OF WINNIPEG
WATER AND WASTE DEPARTMENT

SOUTH END WATER POLLUTION CONTROL CENTRE
SEWPCC UPGRADING/EXPANSION PROJECT
AUTOMATION
INSTALLATION DETAILS
GAS DETECTION

CITY DRAWING NUMBER	SHEET	REV.	SIZE
1-0102-ADTL-A007	001	00	A1

PLOT DATE: Apr 01, 2017 – 4:01pm
FILE NAME: 1-0102-ADTL-A007.dwg

LAST SAVE: 2017/04/01 – 4:01pm
PATH: C:\pw_workdir\ch2mhill_wbg\sh043264\d0356273\1-0102-ADTL-A007.dwg