A1 SIZE – 594mm x 841mm

GENERAL NOTES:

1. ALL INSTALLATIONS MUST MEET MANUFACTURERS INSTALLATION INSTRUCTIONS.

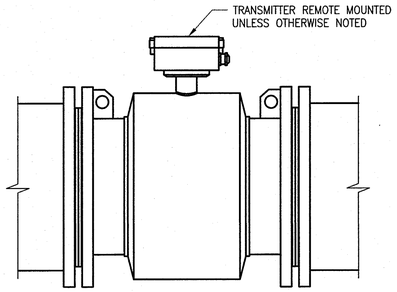

NOTES:
1. INSTALL REDUCERS AS NEEDED TO ACCOMMODATE DIAMETER DIFFERENCES BETWEEN METERED AND PROCESS PIPE.
2. WHERE STRAIGHT RUNS ARE LONG ENOUGH, ENSURE INSTALLATION MEETS MINIMUM INLET AND OUTLET PIPE DIAMETERS.

(A) TYPICAL SIEMENS MAG 3100 FLOW TUBE – CONDUCTIVE PIPE
NTS

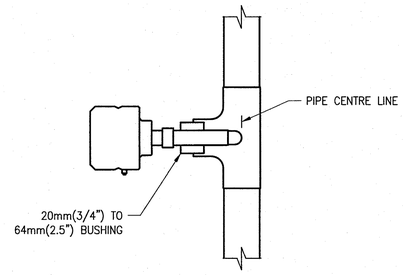

NOTES:
MINIMUM TEE SIZE 75mm. PROVIDE REDUCERS FOR LINES SMALLER THE 75mm.

(B) FLOW SWITCH – TEE CONNECTION
NTS

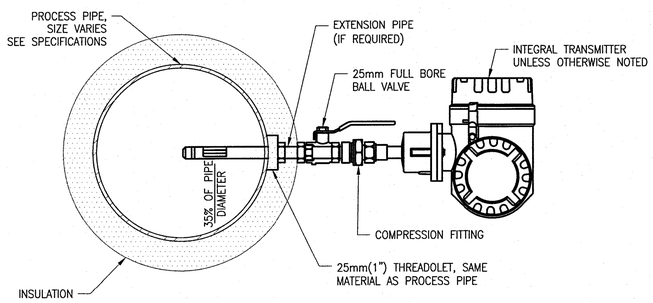

NOTES:
1. ORIENT FLOW DIRECTION ARROW AS PER MANUFACTURES INSTRUCTIONS.
2. MOUNT SENSOR ON TOP OF PIPE FOR HORIZONTAL PIPES.

(C) THERMAL MASS FLOW ELEMENT – PIPE MOUNT
NTS

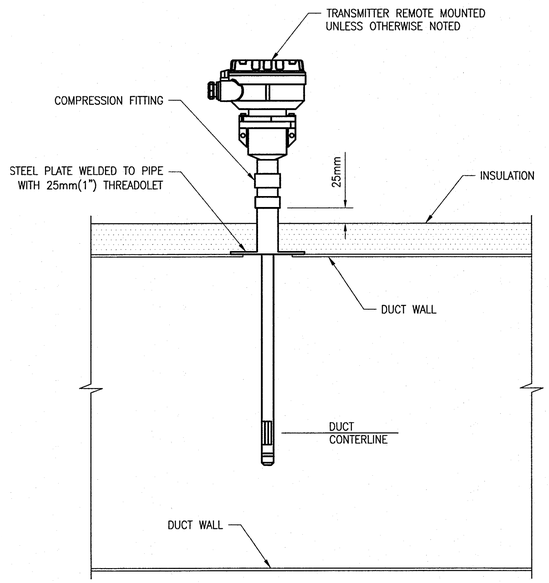

NOTES:
1. ORIENT FLOW DIRECTION ARROW AS PER MANUFACTURES INSTRUCTIONS.
2. MOUNT SENSOR TO TOP OF DUCT IF ACCESSIBLE. OTHERWISE, MOUNT TO SIDE.

(D) THERMAL MASS FLOW ELEMENT – DUCT MOUNT
NTS

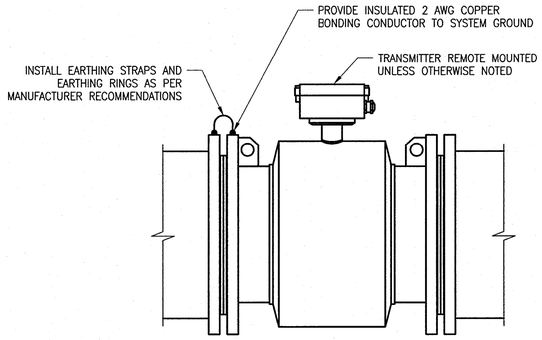

NOTES:
1. INSTALL REDUCERS AS NEEDED TO ACCOMMODATE DIAMETER DIFFERENCES BETWEEN METERED AND PROCESS PIPE.
2. ENSURE INSTALLATION MEETS MINIMUM INLET AND OUTLET PIPE DIAMETERS.

(E) SIEMENS MAG 3100 FLOW TUBE – PTFE/PFA LINED PIPE
NTS

APEGM Certificate of Authorization
SNC-Lavalin Inc.
No. 4489

NO.	REVISIONS	DATE	DESIGN	CHECK
00	ISSUED FOR CONSTRUCTION – 976-2016	2017/04/05	SSB	TMC

CH2MHILL. SNC·LAVALIN KGS GROUP

DESIGNED BY: S. BOGHOSIAN	CHECKED BY: T. CHURCH
DRAWN BY: MJ. PERSSON	APPROVED BY: E. RYCZKOWSKI
SCALE: NTS	ISSUED FOR CONSTRUCTION BY: J. SHUMKA
DATE: 2015/03/24	DATE: 2017/04/05
CONSULTANT NO.: 474248	

ENGINEER'S SEAL
PROVINCE OF MANITOBA
T.M. CHURCH
Member 32682
REGISTERED PROFESSIONAL ENGINEER
Apr. 5, 2017

THE CITY OF WINNIPEG
WATER AND WASTE DEPARTMENT

SOUTH END WATER POLLUTION CONTROL CENTRE
SEWPCC UPGRADING/EXPANSION PROJECT
AUTOMATION
INSTALLATION DETAILS
FLOW INSTRUMENTS

CITY DRAWING NUMBER	SHEET	REV.	SIZE
1-0102-ADTL-A003	001	00	A1

PLOT DATE: Apr 01, 2017 – 4:01pm
FILE NAME:1-0102-ADTL-A003.dwg

LAST SAVE: 2017/04/01 – 4:01pm
PATH: C:\pw_workdir\ch2mhill_wbg\sh043264\d0356273\1-0102-ADTL-A003.dwg